Fire damper

FNC1U

Description

Lindab's new generation of circular fire damper for both fire and hot/cold gases dispersion in the duct system.

The damper is made of galvanized steel with LindabSafe connection with leakage class C according to EN1751.

Tested and classified in accordance with EN 1366-2 and EN 13501 with 300 Pa negative pressure and CE marked in accordance with EN 15650.

The FNC damper is compatible to be used for the Lindab FDS system to have the possibility for fast commissioning and simple control of the fire damper system.

- Simple & fast installation
- Light-weighted
- No accessories needed
- No loose objects
- Lindab Safe connection

Product code		
Type	FNC	Circular fire damper
Classification	1	EI60S
Connection	U	Safe gasket
Motor type	B24	Belimo motor BFL24T (24V)
	B230	Belimo motor BFL230T (230V)
	S24	Siemens motor GNA126 (24V)
	S230	Siemens moror GNA326 (230V)
Dimension	XYZ	Nominal diameter (mm)

Ordering example

FNC 1 U B24 200

Type
Classification
Connection
Motor type
Dimension Ød

Example: FNC-1-U-B24-200

Dimensions

Type B24 Ø 100-400 mm

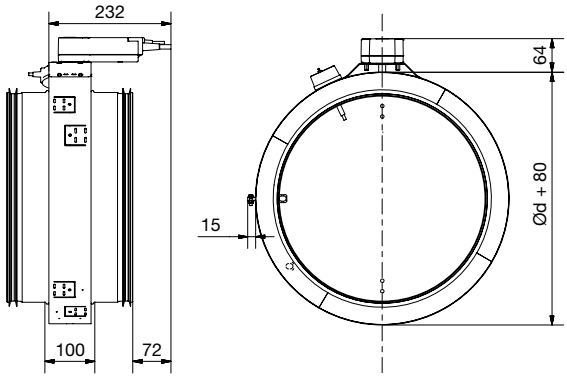

Type S24 Ø 100-400 mm

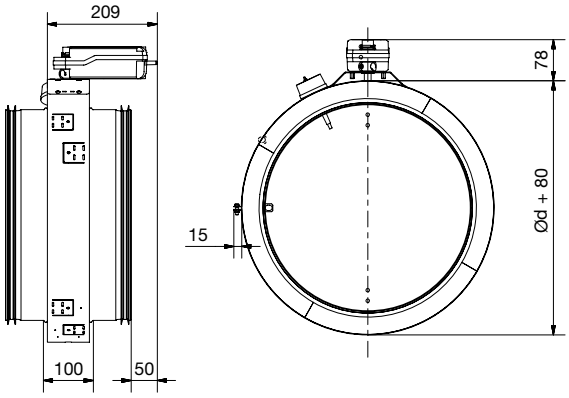

Classification details

E I 60 S

E = integrity
I = Thermal insulation
Time (minutes)
S = Smoke leakage

The fire resistance classifications refer to the conditions obtained by rigorously applying the instructions inticated in the Technical Manual, with reference both to the construction of the wall/ceiling and the installation of the damper.