Bend

BUI 90°

Description

Bend with pressed outer casing.

Dimensions

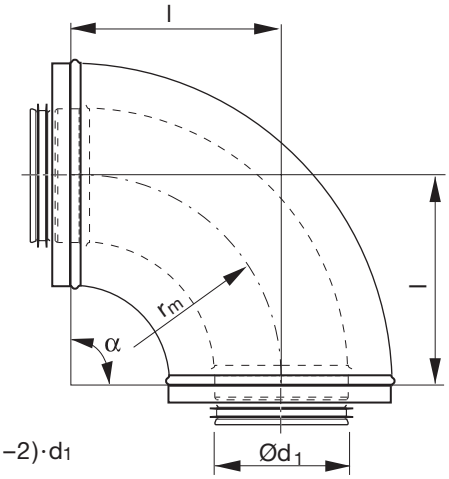

$r_m \approx (1–2) \cdot d_1$

25 mm insulation.

Ød$_1$ nom	l mm	m kg
100	150	1,70
125	180	2,40
150	200	3,10
160	200	3,60
200	250	5,10

50 mm insulation.

Ød$_1$ nom	l mm	m kg
100	200	2,80
125	225	3,70
150	250	4,70

Ordering example

BUI	200	90°	25
Product			
Dimension Ød$_1$			
Angle °			
Insulation 25/50			

We reserve the right to make changes without prior notice
2019-02-21